MULTIFUNCTION POWER TEST BOARD — MODEL PTB-

VOLTS, AMPS, WATTS, WATTHOURS, POWER FACTOR & VA

DESCRIPTION

The PTB board-level system monitor is designed to measure and provide analog output signals for all parameters of voltage, current, and total power in an electrical system. Optional outputs are available for power factor, apparent power, and Watthours as plug-in "daughter" boards.

The PTB comes standard with seven analog outputs for voltage, current, and power. As options, 0-10Vdc, 0-1mAdc and 4-20mAdc outputs are available.

The 10.75" x 8.9" x 2.5" circuit board is provided with mounting holes to fit a 10" x 12" NEMA case (option C) or the circuit board can be mounted in the user's cabinet with the stand-offs provided. Input and output terminals are located directly on the circuit board.

The electronic circuitry uses solid-state multipliers, RMS converters, and amplifiers. 115Vac or 230Vac instrument power options are available.

FEATURES

- Small Package
- Less Wiring
- High Accuracy
- Up to 9 Analog Outputs
- Circuit Board Design
- Direct Input to 600Vac
- Low Cost
- Calibrated with CTs

5 YEAR WARRANTY

MODEL SELECTION

PTB – □ □ □ □ □ □ □ □

SYSTEM		VOLTS		AMPS		SENSOR SIZE	OUTPUTS		INST. PWR.		OPTION P	OPTION W	OPTION C
1	1Φ2W	1	0 - 150 Vac	1	0 - 5 Aac	(none)	D	0 - 10Vdc	1	115Vac	Apparent Power & Power Factor	Watthours	NEMA Case
2	3Φ3W	2	0 - 300 Vac	2	0 - 100 Aac	W	B	0 - 1mAdc	2	230Vac			
3	*3Φ4W	3	0 - 600 Vac	3	0 - 200 Aac	W	E	4 - 20mAdc					
4	*1Φ3W			4	0 - 400 Aac	X							

*Specify L-N Voltage

NOTE: External current sensors are included with models having an input current range of 100A and above (PTB-xx2xxx, PTB-xx3xxx, and PTB-xx4xxx models). For details, see dimension and connection diagrams.

ORDERING INFORMATION

Example: 3Φ3W, 2-element system, 0-150Vac & 0-100Aac Inputs, 0-10Vdc & Watthour Outputs, 115Vac instrument power, in NEMA case

PTB-212D1WC

OHIO SEMITRONICS, INC.
4242 REYNOLDS DRIVE * HILLIARD, OHIO * 43026-1264
PHONE: (614) 777-1005 * FAX: (614) 777-4511
WWW.OHIOSEMITRONICS.COM * 1-800-537-6732

SPECIFICATIONS

INPUT

Voltage:
- F.S. Linear Range ..... (See Table)
- Over-voltage ..... 150Vac models 175Vac
  - 300Vac models 350Vac
  - 600Vac models 610Vac
- Burden ..... <0.25VA/Phase

Current:
- F.S. Linear Range ..... (See Table)
- Over-current (continuous)
  - 0-5A models 10Aac
  - All other models ..... 125% of F.S.
- Burden ..... <0.25VA/Phase

Frequency Range ..... (Linear) 48-70Hz

Power Factor ..... Any

DIELECTRIC TEST ..... (Input To Outputs) 1500Vac

OPTIONS P, W or C

Apparent Power (VA) ..... **Same Formula as Watts

Power Factor ..... 0-1 Lead or Lag

Watthours
- 0-5A Models ..... 1 Wh/Cnt
- 0-100A Models ..... 20 Wh/Cnt
- 0-200A Models ..... 40 Wh/Cnt
- 0-400A Models ..... 80 Wh/Cnt

Relay Rating 120V, 0.5A

Relay Closure Duration 200ms

OUTPUT

(Output range shown for D models. See table for other options.)

Voltage (RMS) (3) ..... 0-F.S. Volts Input = 0-10Vdc Output

Current (RMS) (3) ..... 0-F.S. Amps Input = 0-10Vdc Output

Watts (True Power) ..... 0-F.S. Watts Input = 0-10Vdc Output

**F.S. Watts = F.S. Volts x F.S. Amps x No. of Elements x 0.8

Output Burden ..... 10V models ..... >2kΩ
- 1mA models 0-10kΩ
- 20mA models 0-500Ω

Ripple ..... <±1% F.S

Response Time 250ms

ACCURACY (Includes linearity, setpoint & power factor at 25°C)

5A Models ..... Voltage ..... ±0.3% F.S.
- Current ..... ±0.3% F.S.
- Power ..... ±0.3% F.S.

100A - 400A Models ..... Voltage ..... ±0.5% F.S.
- Current ..... ±0.5% F.S.
- Power ..... ±0.5% F.S.

Watthours ..... (Option) ..... ±0.5% F.S.

Power Factor (10-100% Input) .. (Option) ..... ±0.01 PF

TEMPERATURE

Temperature Effects ..... (10° to 35°C) .....±0.5%

INSTRUMENT POWER

Option 1 ..... 115Vac, ±15%, 50-400Hz, 8.5VA

Option 2 ..... 230Vac, ±15%, 50/60Hz, 8.5VA

CURRENT SENSOR DIMENSIONS

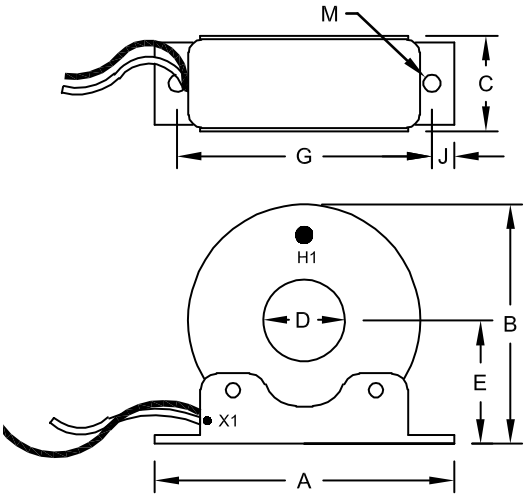

LEAD LENGTH IS 24 INCHES.
WHITE LEAD IS X1.

SENS. SIZE	SENSOR DIMENSIONS (in inches)								WT. LBS.
	A	B	C	D	E	G	J	M	
W	4.50	3.7	1.25	1.25	1.94	3.88	0.34	0.27 x 0.44	1.43
X	6.50	4.7	1.25	2.50	2.46	5.75	0.39	0.28	1.61

Dwg# 0902-00871-B Rev --

OHIO SEMITRONICS, INC.
4242 REYNOLDS DRIVE * HILLIARD, OHIO * 43026-1264
PHONE: (614) 777-1005 * FAX: (614) 777-4511
WWW.OHIOSEMITRONICS.COM * 1-800-537-6732

DIMENSIONS & CONNECTIONS

MODEL **PTB-**

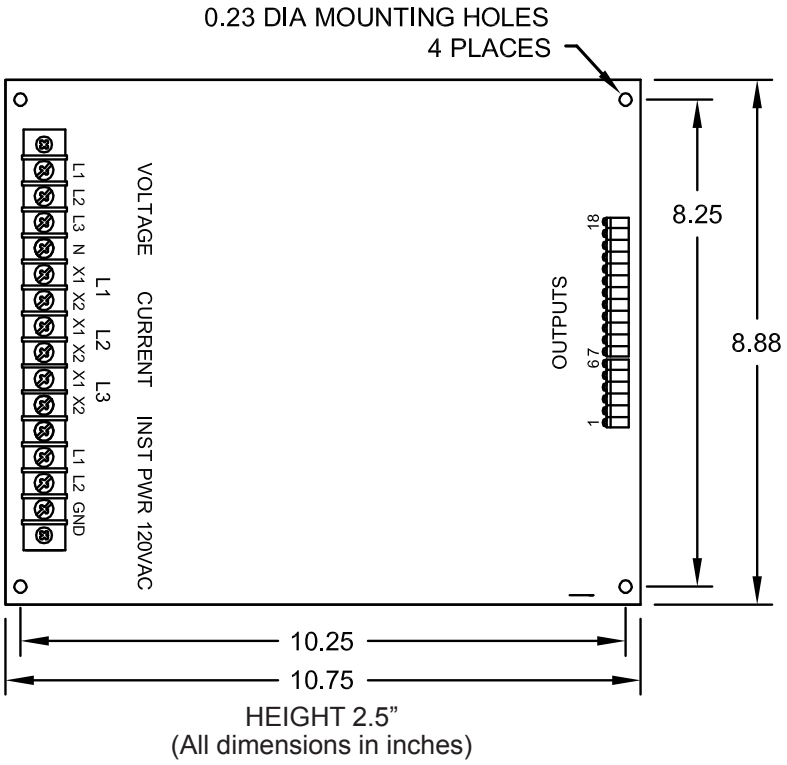

OPTIONAL NEMA CASE
Dimensions..... 12" X 10" X 4"
Mounting.... 12.5" X 8.12", 0.22" Dia. Holes
Weight ..... 3.0 lbs.

Dwg# 0902-00890-B Rev --

OUTPUT CONNECTIONS

1Φ2W SYSTEM		3Φ3W SYSTEM			3Φ4W SYSTEM			1Φ3W SYSTEM		
1	Watthour Relay	1	Watthour Relay		1	Watthour Relay		1	Watthour Relay	
2		2			2			2		
3	N/A	3	N/A		3	N/A		3	N/A	
4	N/A	4	N/A		4	N/A		4	N/A	
5	Common	5	Common		5	Common		5	Common	
6	Common	6	Common		6	Common		6	Common	
7	Common	7	Common		7	Common		7	Common	
8	Power Factor	8	Power Factor		8	Power Factor		8	Power Factor	
9	Volt-Amperes	9	Volt-Amperes		9	Volt-Amperes		9	Volt-Amperes	
10	Watts	10	Watts		10	Watts		10	Watts	
11	Common	11	Common		11	Common		11	Common	
12	N/A	12	L3	Current	12	L3	Current	12	N/A	Current
13	N/A	13	L2		13	L2		13	L2	
14	Current	14	L1		14	L1		14	L1	
15	Common	15	Common		15	Common		15	Common	
16	N/A	16	L1-L2	Voltage	16	L3-N	Voltage	16	N/A	Voltage
17	N/A	17	L2-L3		17	L2-N		17	L2-N	
18	Voltage	18	L3-L1		18	L1-N		18	L1-N	

OHIO SEMITRONICS, INC.
4242 REYNOLDS DRIVE * HILLIARD, OHIO * 43026-1264
PHONE: (614) 777-1005 * FAX: (614) 777-4511
WWW.OHIOSEMITRONICS.COM * 1-800-537-6732

INPUT CONNECTION DIAGRAMS

MODEL **PTB-**

SINGLE-PHASE, TWO-WIRE CONNECTIONS

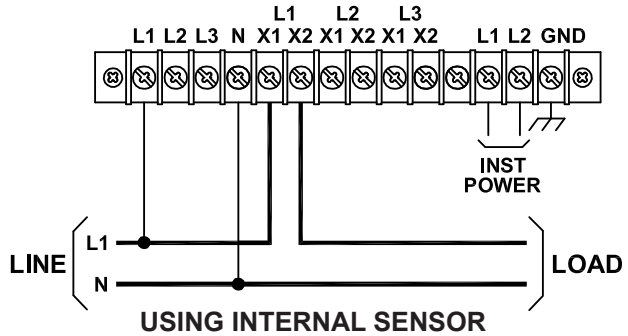

USING INTERNAL SENSOR

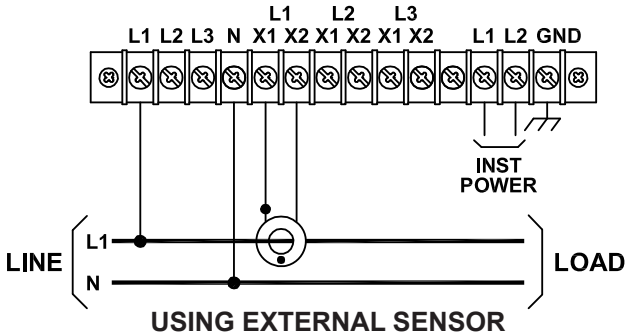

USING EXTERNAL SENSOR

SINGLE-PHASE, THREE-WIRE CONNECTIONS

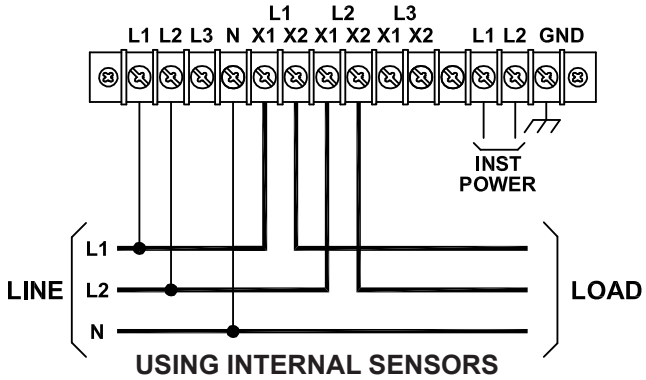

USING INTERNAL SENSORS

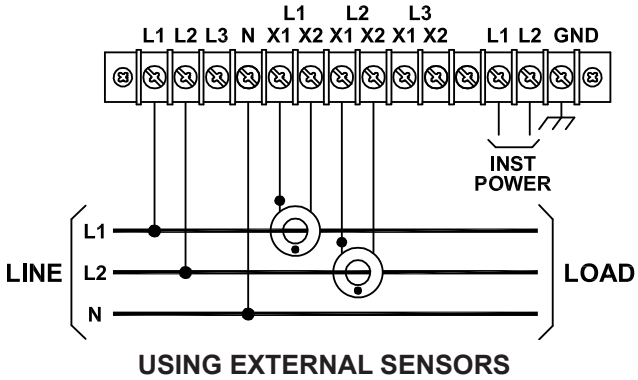

USING EXTERNAL SENSORS

THREE-PHASE, THREE-WIRE CONNECTIONS

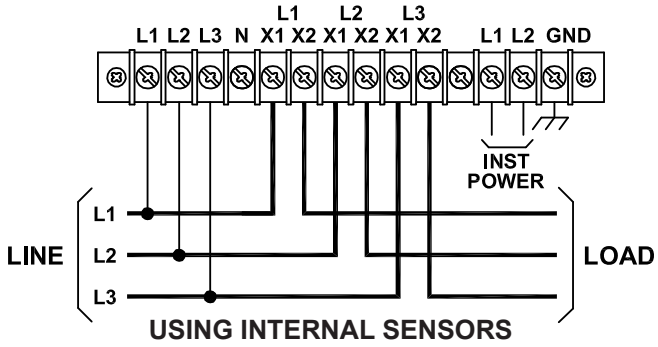

USING INTERNAL SENSORS

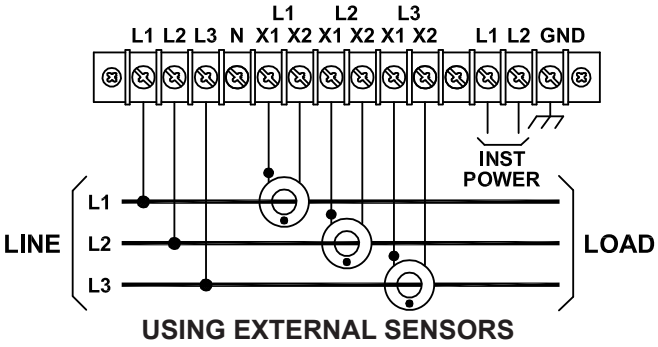

USING EXTERNAL SENSORS

THREE-PHASE, FOUR-WIRE CONNECTIONS

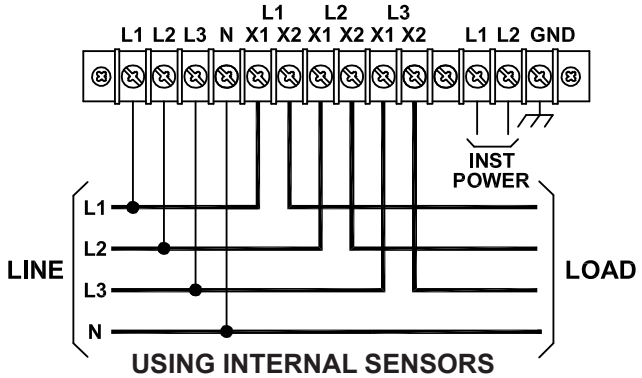

USING INTERNAL SENSORS

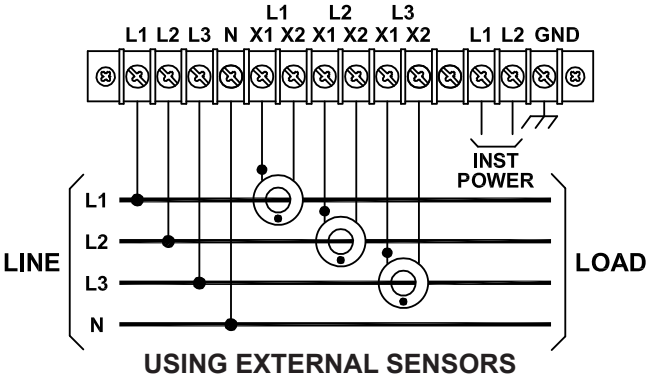

USING EXTERNAL SENSORS

Dwg# 0902-00890-B Rev --

OHIO SEMITRONICS, INC.
4242 REYNOLDS DRIVE * HILLIARD, OHIO * 43026-1264
PHONE: (614) 777-1005 * FAX: (614) 777-4511
WWW.OHIOSEMITRONICS.COM * 1-800-537-6732