Life Is On | Eurotherm by Schneider Electric

Adaptable Power Control

EPack™-1PH Compact SCR Power Controllers

Designed For Fast Integration And Optimum Efficiency

Product at a Glance

OEMs and system integrators need to be able to react quickly to customer needs while maximizing resources. Whether replacing an existing product or designing a new process, the design of the EPack™ power controller has been carefully considered for fast and easy panel installation, commissioning and integration into wider systems, lowering equipment costs, and manufacturing times for you and your customers.

End users continually need to improve operational efficiency and productivity. EPack power controllers have been designed to deliver real savings, helping to reduce your energy costs. Get the best from your operations; quick and easy to install, integrate and commission. Its compact size also offers powerful and versatile features that help to minimize costs, whilst improving productivity and quality.

> See EPack™ compact SCR power controllers brochure HA031554 to discover how full EPack range can add value to your business

EPack-1PH is a compact fully-featured power controller from Eurotherm, combining a high level of functionality and configurability with simplicity of setup and operation. The combination of advanced configurable firing modes allows close matching to load characteristics for maximum process efficiency. Additionally, EPack is highly configurable and may be adapted for current and future needs using a software key to purchase additional functionality when needed.

Key Features:

- Nominal load current from 4 to 125 amps
- Voltage up to 500V
- Compact DIN Rail and bulkhead mounting
- Configurable via Eurotherm iTools (PC software) or front panel
- Plug and play Ethernet communications with Zero configuration networking (zeroconf)
- Fast start up with 'Quick Start'
- V^2, I^2 or True power control with current limitation
- Wide range of firing modes: Logic, Phase Angle, Adjustable Burst Firing, Fast Cycle
- Controls comprehensive range of loads: Resistive, Infrared, Transformer Primary, Molybdenum Disilicide, Silicon Carbide
- Measurements: Current, voltage, impedance, energy usage and more
- Load fault detection up to 1 element of 6
- Integrated dual port Ethernet switch for "Daisy Chained" communications
- Modbus® TCP, Ethernet IP or Profinet
- Defend OEM knowledge and IP (OEM Security)
- SCCR 100kA

Specifications

General	
Directive	EMC directive 2014/30/EU Low Voltage Directive 2014/35/EU
Safety Specification	EN60947-4-3:2014
EMC Emissions Specification	EN60947-4-3:2014 - Class A product
EMC Immunity Specification	EN60947-4-3:2014
Vibration Tests	EN60947-1 annex Q category E
Shock Tests	EN60947-1 annex Q category E
Approvals	
European Community	EN60947-4-3:2014: Low-voltage switchgear and controlgear - Part 4-3:Contactors and motor-starters - AC semiconductor controllers and contactors for non-motor loads (identical to IEC60947-4-3:2014) Declaration of conformity available on request.
US & Canada	UL60947-4-1 CAN/CSA C22.2 NO.60947-4-1-14 Low-Voltage Switchgear and Controlgear - Part 4-1: Contactors and Motor-Starters - Electromechanical Contactors and Motor-Starters - U.L. File N° E86160
Eurasian Economic Union	GOST IEC60947-4-3 : 2014 (identical to IEC 60947-4-3:1999+AMD1:2006+AMD2:2011) EAC Declaration of conformity for the Customs Union EurAsEC EAC approval and Pattern Approval
Australia	Regulatory Compliance Mark (RCM) to Australian Communication and Media Authority Based on compliance to EN60947-4-3:2014
China	Product not listed in catalogue of products subject to China Compulsory Certification (CCC)
Protection	CE: 16 to 63A > IP10 according to EN60529 80 to 125A > IP20 according to EN60529 UL: open type

Condition Of Use	
Atmosphere	Non-corrosive, non-explosive, non-conductive
Degree Of Pollution	Degree 2
Storage Temperature	–25°C to 70°C (maximum)
Usage Temperature	0 to 45°C at 1000m 0 to 40°C at 2000m
Altitude	1000m maximum at 45°C 2000m maximum at 40°C
Derating Curves	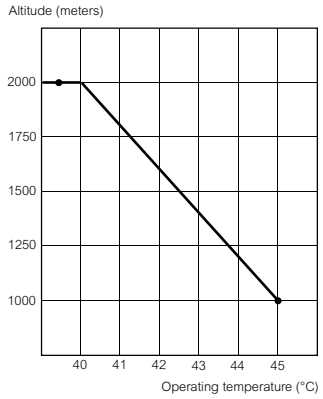

Mechanical Details				
Unit	Height	Width	Depth	Weight
16 to 32A	129.2mm / 5.09in	51mm / 2.01in	136.2mm / 9.04in	0.8kg / 1.76lb
40 to 63A	129.2mm / 5.09in	72mm / 2.83in	173.3mm / 9.04in	0.95kg / 2.09lb
80 to 100A	197.6mm / 7.78in	80mm / 3.15in	202.1mm / 9.04in	1.8kg / 3.97lb
125A	197.6mm / 7.78in	120mm / 4.72in	202.1mm / 9.04in	2.5kg / 5.51lb

Fuses		
Current Rating	Fuse Holder Size	Dimensions H x W x D
≤25A without MS	10x38mm / 13/32x1-1/2in	88.5x17.5x64.5mm / 3.48x0.69x2.54in
≤25A with MS	14x51mm / 9/16x2in	110.8x26.5x76.5mm / 4.36x1.04x3.01in
32A with or without MS	14x51mm / 9/16x2in	110.8x26.5x76.5mm / 4.36x1.04x3.01in
40A with or without MS	14x51mm / 9/16x2in	110.8x26.5x76.5mm / 4.36x1.04x3.01in
50A with or without MS	22x58mm / 2-9/32in	127.5x35x76.5mm / 5.02x1.38x3.01in
63A with or without MS	27x60mm / 1-1/16x2-3/8in	149.4x40x93.5mm / 5.88x1.57x3.68in
80A with or without MS	27x60mm / 1-1/16x2-3/8in	149.4x40x93.5mm / 5.88x1.57x3.68in
100A with or without MS	27x60mm / 1-1/16x2-3/8in	149.4x40x93.5mm / 5.88x1.57x3.68in
125A with or without MS	27x60mm / 1-1/16x2-3/8in	149.4x40x93.5mm / 5.88x1.57x3.68in

Power	
Nominal Current	4 to 125 amps
Nominal Voltage	100 to 500Vac +10%/–15%
Accuracy	+2% of full scale - from 100 to 500V +10%/–15%
Frequency	47Hz to 63Hz
Short Circuit Protection	By external supplemental high speed fuses
Rated Conditional Short-circuit Current	100kA (Coordination Type 1)
Type Of Loads	
AC51	Resistive or slightly inductive load (cos phi>0.8)
AC-56a	Transformer Primary or MOSI (e.g. Molybdenum disilicide); Time temperature dependant loads (e.g.Silicon Carbide)

Control	
Auxillary Power Supply	100V to 500V +10%/–15% or 24 ac/dc (±20%)
Control Setpoint	Analog or Logic input or Digital Comms
Analogue Input Signal	
Voltage	Range: 0-5V, 1-5 V, 0-10V or 2-10V Impedance: 140 k Ohms typical (0-10V signal)
Current	Range: 0-20mA or 4-20mA Input resistance: 100 ohms to allow for three units wired in series to be driven from a single controller's analogue output
Resolution	11 bits
Linearity	±0.1% of Scale
Firing Mode	Phase angle, Intelligent Half cycle, Variable Modulation Burst firing (default 16 cycles), Fix modulation period (default 2 seconds), Logic mode
Control Mode	V^2 control, I^2 control, True Power control, Open loop with feed forward and Trim modes, Threshold limit or by transfer V^2 <-> I^2 or P<-> I^2
Configurable Digital Inputs	Input 1: enable by default; Input 2: setpoint, alarm acknowledgment, 10V supply, ...
Voltage Inputs	Active level (high): 11V<Vin<30V with 6mA<Iin<30mA ; Non-active level (low): -3V<Vin<5V with 2mA<Iin<30mA or 5V<Vin<11V with Iin<2mA - PLC compatible inputs, types 1 & 2 according to IEC 61131-2
Contact Closure Inputs	Source current: 10mA min; 15mA max ; Open contact (non active) resistance: 800 Ohms to ∞ Closed contact (active) resistance: 0 to 450 Ohms Absolute Maximum ±30V or ±25mA
One Alarm Relay	Changeover relay 2A rms - 264V rms normally energised. (250V rms max for UL). This relay will be de-energised in case of serious alarms: short circuit thyristor, open circuit, fuse blown, missing main, chop off

Communications	
Connection	Dual port Ethernet - RJ45 Integral switch
Protocols	Modbus TCP, Ethernet IP or Profinet
Baud Rate	10/100 full or half duplex

Display	
Technology	TFT
Size	1.5"
Messages	Configuration, Monitoring and Diagnostics

Mechanical Details

16A to 32A

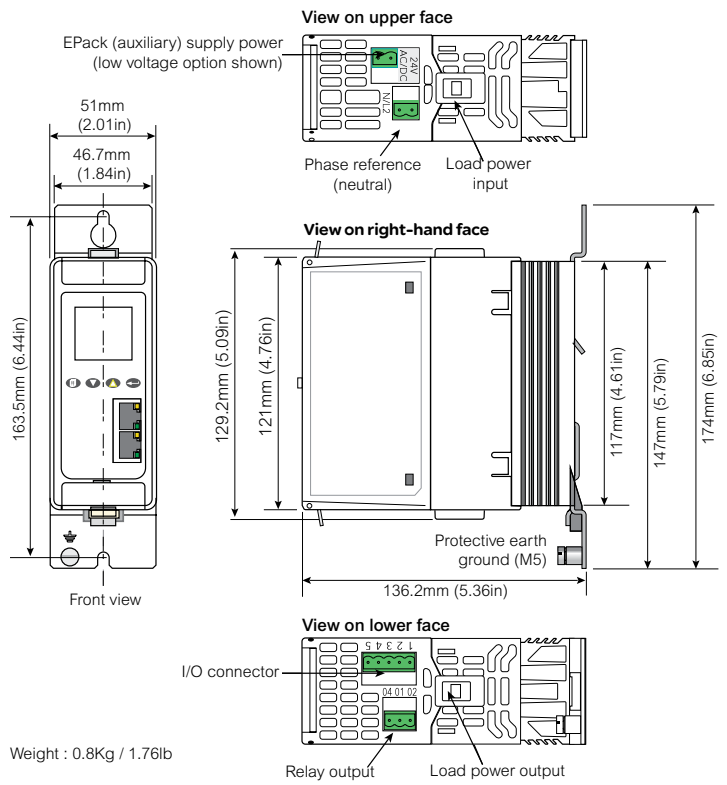

Weight : 0.8Kg / 1.76lb

Connector Details (pinout)

I/O Details

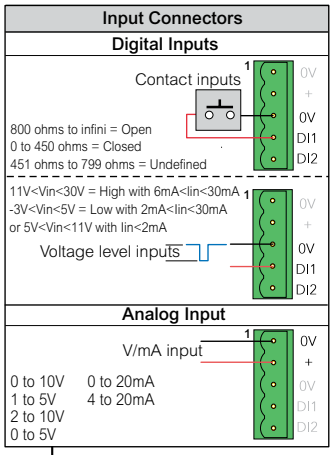

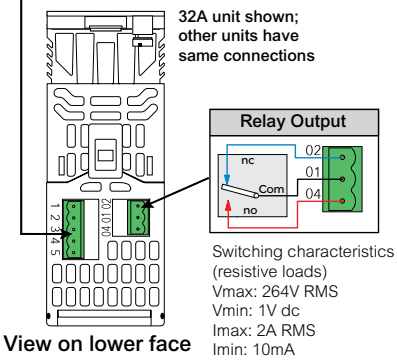

Switching characteristics
(resistive loads)
Vmax: 264V RMS
Vmin: 1V dc
Imax: 2A RMS
Imin: 10mA

40A to 63A

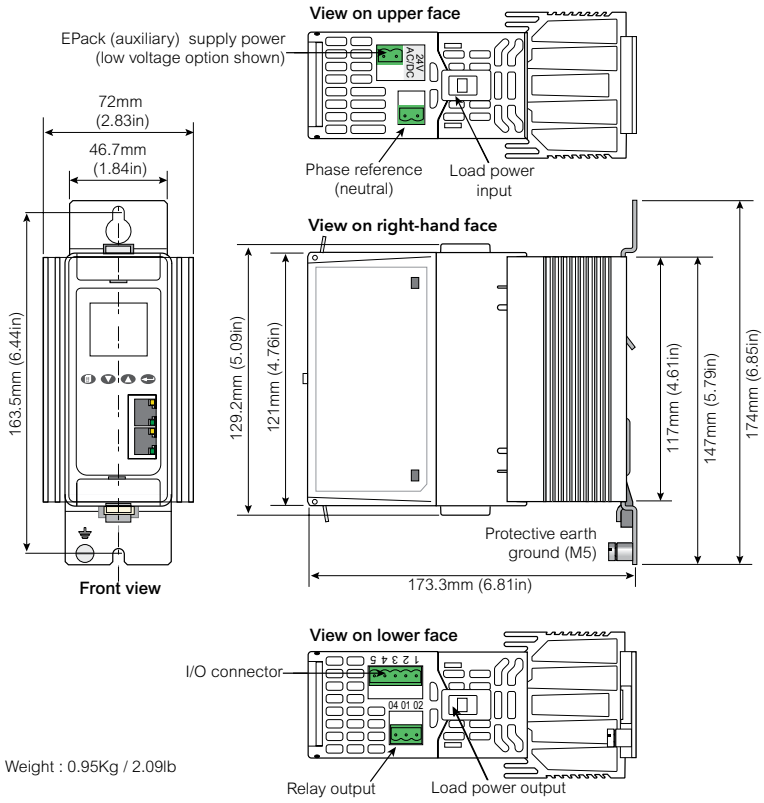

Weight : 0.95Kg / 2.09lb

Power Supply Details
16A to 63A

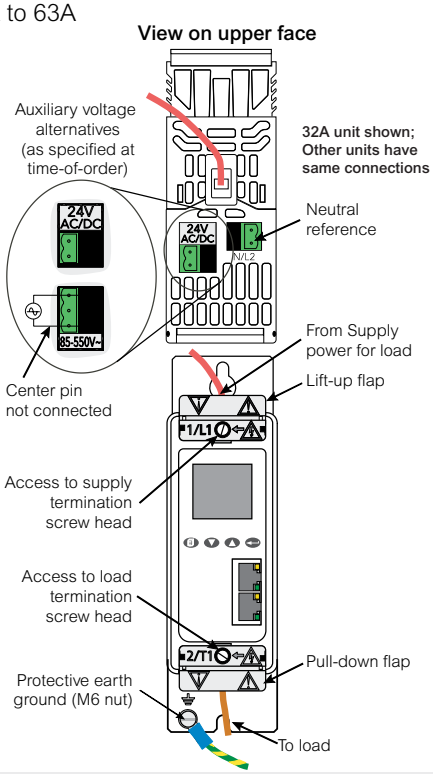

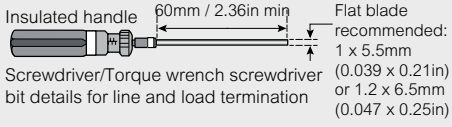

Mechanical Details

80A to 100A

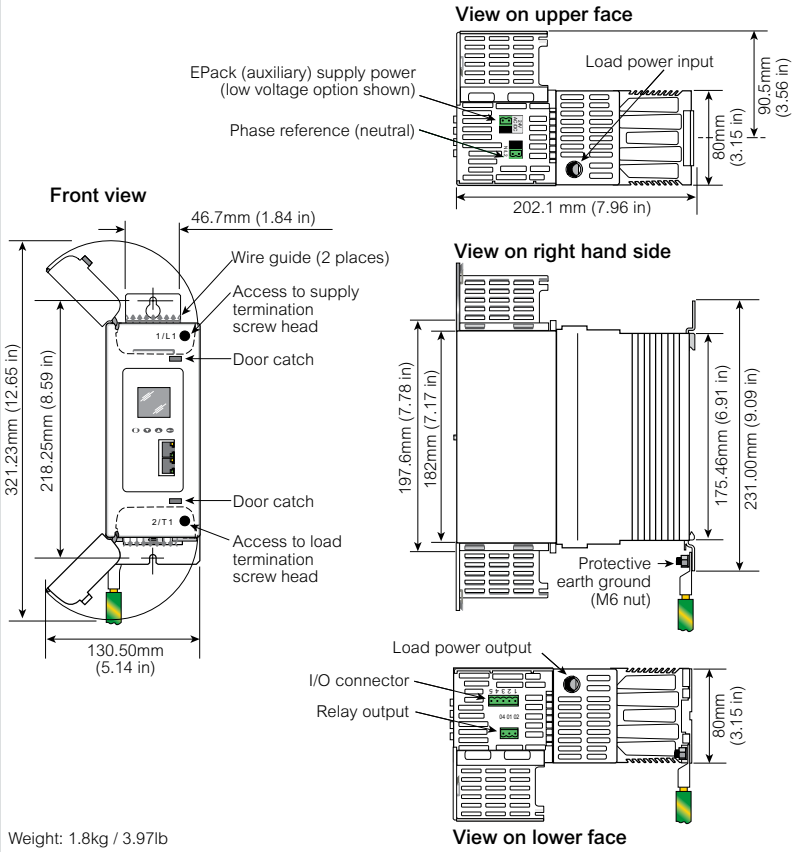

Weight: 1.8kg / 3.97lb

125A

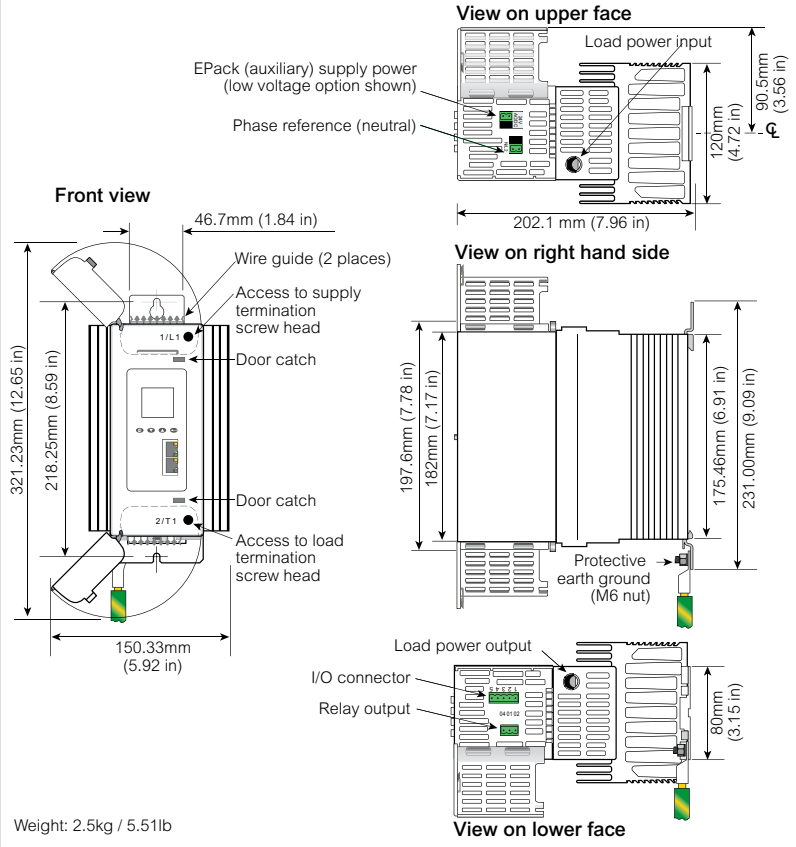

Weight: 2.5kg / 5.51lb

Connector Details (pinout)

I/O Details

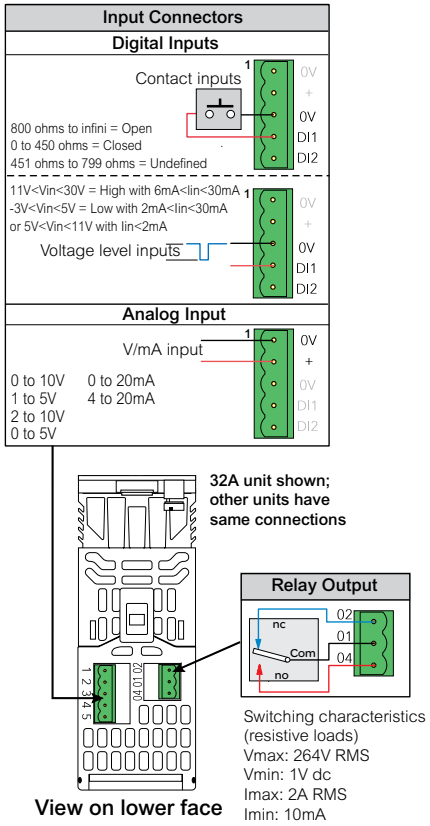

Power Supply Connection Details 80A to 125A

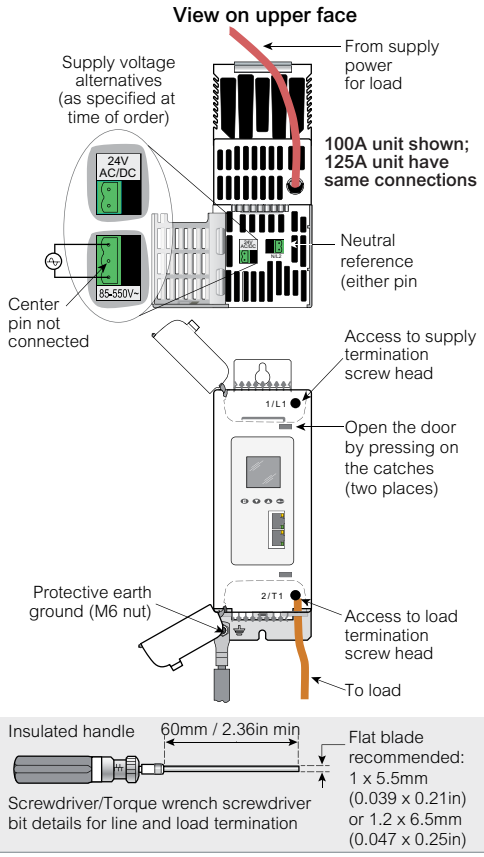

Order Codes

The EPack power controller is ordered using a short code for the chargeable options and an extended option configuration code for commissioning.

If the extended code is not used, the software configuration is completed using a quick start procedure or Eurotherm iTools software.

EPack controllers may be upgraded with additional chargeable options at any time using a software key order code.

Product Coding

EPACK-1PH	1	2	3	4	5	6	7	8	9	10	11	12	13
			XXX					XXX					

14	15	16	17	18	19	20	21	22	23
									XXX

Model	
EPACK-1PH	Power Controller

1	Maximum Current
16A	16 amps
25A	25 amps
32A	32 amps
40A	40 amps
50A	50 amps
63A	63 amps
80A	80 amps
100A	100 amps
125A	125 amps

2	Auxillary Power Supply
500V	500V max
24V	24V ac/dc

3	Reserved
XXX	Reserved

4	Control Option
V2	V^2 control (standard)
I2	I^2 control
V2CL	V^2 with current limitation by threshold
PWRCL	Power control with current limit

5	Transfer Option
XXX	-
TFR	I^2 Transfer

6	Energy Option
XXX	-
EMS	Energy measurement

7	Comms Option
TCP	Modbus TCP (standard)
IP	Ethernet IP

8	Reserved
XXX	Reserved

9	Warranty
XXX	Standard Warranty
WL005	5 Year Warranty
USWL3	US Extended Warranty

10	Custom Labelling
XXX	Standard (Eurotherm)
FXXXX	Special Label

11	Graphical Wiring
XXX	Standard configuration (no graphical edition)
GWE	Graphical Wiring Editor

12	Fuse
XXX	Without fuse
HSP	High speed fuse without microswitch
HSM	High speed fuse with microswitch

13	Configuration
XXXXX	Default
LC	Long code

Optional Configuration

14	Nominal Load Current
nnnA	1 - Value field 1

15	Nominal Line Voltage
100V	100 volts
110V	110 volts
115V	115 volts
120V	120 volts
127V	127 volts
200V	200 volts
208V	208 volts
220V	220 volts
230V	230 volts
240V	240 volts
277V	277 volts
380V	380 volts
400V	400 volts
415V	415 volts
440V	440 volts
460V	460 volts
480V	480 volts
500V	500 volts

16	Load Type
XX	Resistive
TR	Transformer primary

17	Heater Type
XX	Resistive
CSI	Silicon Carbide
SWIR	Short Wave Infra-Red

18	Firing Mode
PA	Phase angle
IHC	Intelligent half cycle
BF	Variable Modulation Burst firing (default 16 cycles)
FX	Fix modulation period (default 2 seconds)
LGC	Logic mode

19	Analog Input Function
XX	None
SP	Setpoint
HR	Setpoint limit
IL	Current limit
TS	Current transfer span

20	Analog Input Type
0V	0-10 volts
1V	1-5 volts
2V	2-10 volts
5V	0-5 volts
0A	0-20 mA
4A	4-20mA

21	Digital Input 2 Function
XX	None
AK	Alarm acknowledgement
LG	Setpoint for logic mode
RS	Remote setpoint selection
FB	Fuse blown
SU	10V supply

22	Digital Input 1 Function
XXX	Reserved
EN	Enable

Software Upgrade Options

	1	2	3	4	5	6	7	8

1	Serial Number Instrument
nnnn	Serial number

2	Current Ratings
XXX	No change
16A-25A	Upgrade 16A to 25A
16A-32A	Upgrade 16A to 32A
25A-32A	Upgrade 25A to 32A
40A-50A	Upgrade 40A to 50A
40A-63A	Upgrade 40A to 63A
50A-63A	Upgrade 50A to 63A
80A-100A	Upgrade 80A to 100A

3	Control Option
XXX	no change
V2-V2CL	Upgrade V^2 to V^2CL
V2-PWRCL	Upgrade V^2 to PWRCL
V2CL-PWRCL	Upgrade I^2 to PWR

4	Transfer Option
XXX	No change
TFR	I^2 Transfer

5	Energy Option
XXX	No change
TFR	Energy measurement

6	Comms Option
XXX	No change
IP	Ethernet IP

7	Graphical Wiring
XXX	No change
GWE	Graphical wiring editor

Eurotherm USA
44621 Guilford Drive, Suite 100
Ashburn, VA 20147
Phone: +1-703-724-7300
Fax: +1-703-724-7301
www.eurotherm.com

Life Is On | Eurotherm by Schneider Electric